DATASHEET

airFiber®

Full-Duplex, Point-to-Point Gigabit Radio

Models: AF-24, AF-24HD, AF-5, AF-5U

High Performance Wireless Backhaul

Extreme, Long-Range Links

Worldwide License-Free Operation

UBIQUITI® NETWORKS

SICE DISTRIBUTORE UFFICIALE: www.sicetelecom.it

airFiber®

Revolutionary Wireless Technology

Introducing airFiber®, a truly revolutionary Point-to-Point wireless platform from Ubiquiti Networks. Housed in a compact, highly efficient form factor, airFiber delivers amazing wireless gigabit+ performance, low latency, and long range. airFiber ushers in a new era in price-disruptive wireless technology ideal for carrier backhaul, building-to-building enterprise use, or public safety applications.

Efficient by Design

Every detail of airFiber was designed and engineered by the Ubiquiti R&D Team. From the silicon chip up to the innovative split-antenna architecture, the Ubiquiti R&D Team created airFiber to deliver superior throughput with efficiency. airFiber was purpose-built to create a high performance backhaul.

Plug and Play Deployment

Based on Ubiquiti's innovative and intuitive airOS®, the airFiber Configuration Interface enables quick deployment. With installation efficiency in mind, the mechanical design allows easy installation by one person. A two-person installation crew can effectively install and align an airFiber link.

To fine-tune the alignment, the received signal levels can be conveniently accessed via any of these methods:

- airFiber LED display
- airFiber Configuration Interface
- Audio tone feature

Designed for Freedom

airFiber operates in worldwide, **license-free**, 24 or 5 GHz frequencies. Anyone around the world can purchase and operate airFiber without any special permits, paperwork, or added licensing costs. Users are free to locate, deploy, and operate airFiber practically anywhere they choose (subject to local country regulations).

Model	Description	Operating Frequency*
AF-5	Mid-band 5 GHz frequencies	5470 - 5950 MHz
AF-5U	High-band 5 GHz frequencies	5725 - 6200 MHz
AF-24/AF-24HD	24 GHz frequencies	24.05 - 24.25 GHz

* Refer to the *Specifications* section for more information.

Built for Speed and Range

airFiber delivers gigabit performance at 1.2+ Gbps for airFiber AF-5/AF-5U, 1.5+ Gbps for airFiber AF-24, and 2 Gbps for airFiber AF-24HD. To put this in perspective, airFiber can transmit a 100 MB file in less than a second. Rivaling common broadband providers, airFiber download speed is up to 100x faster. With speed and throughput surpassing conventional wired backhauls, airFiber prevails over expensive and labor-intensive wired infrastructures.

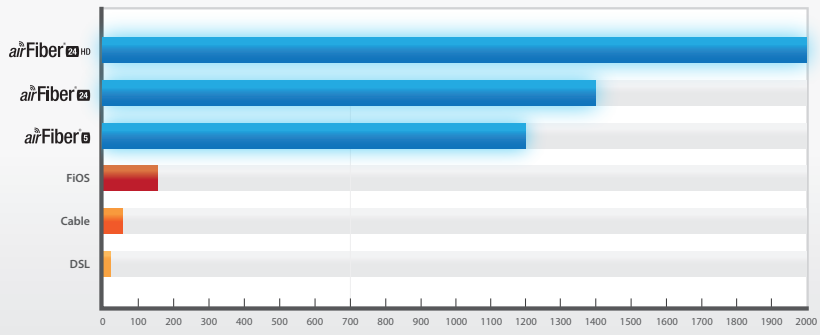

Speed Comparison (Mbps)

airFiber is built for long-range use: up to 13+ km for airFiber AF-24, up to 20+ km for airFiber AF-24HD, and up to 100+ km for airFiber AF-5/AF-5U, which launches the innovative xtreme Range Technology (xRT™) feature.

airFiber backhauls do not share the security risks associated with wired backhauls. The long distances of wired backhauls are vulnerable to copper theft, fiber optic damage, vandalism, and accidental breakage. With airFiber, only the installation points of the airFiber links need to be secured.

SICE DISTRIBUTORE UFFICIALE: www.sicetelecom.it

Innovative Proprietary Modem Technology

Ubiquiti's innovative proprietary modem technology was purpose-built to address the specific challenges of outdoor, PtP (Point-to-Point) bridging and high-performance network backhauls. Every aspect of the radio has been carefully simulated and designed to optimize range, speed, and latency performance in the harshest RF noise environments.

Synchronous Data Transmission and Reception

Conventional wireless standards impose a latency by having to receive a packet before a packet is transmitted. airFiber can transmit data synchronously without any wait time. airFiber features traditional TDD and FDD modes of operation in addition to the proprietary Hybrid Division Duplexing (HDD) mode, which provides a breakthrough in range and spectral efficiency performance.

Based on the ranging algorithm built into the air protocol, the airFiber radios use patent-pending HDD technology to calculate the propagation delay and know when each radio can transmit and receive, so they send packets in precise synchronization. Packet transmission latency is virtually eliminated.

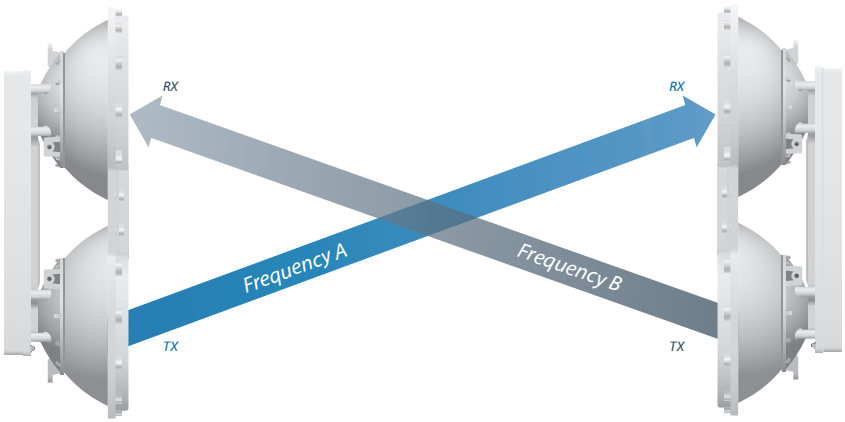

airFiber AF-5/AF-5U Radios in Full-Duplex Mode

airFiber AF-5/AF-5U

Innovative Dual-Antenna Architecture

airFiber features a dual-independent, 2x2 MIMO, high-gain reflector antenna system. Separate yet integrated transmit (TX) and receive (RX) antennas help extend link budgets by eliminating the extra RF losses caused by the switches or duplexers required in systems with common TX/RX antennas.

Network Management

airFiber supports a variety of features to help you manage your network:

- **Network management options** A choice between the greater security of out-of-band management and the convenience of in-band management.
- **SNMP support** Full SNMP support to aid in network management.
- **Local and remote airFiber status information** Available on the Main tab of the airFiber Configuration Interface.

airFiber AF-24 shown without radome

SICE DISTRIBUTORE UFFICIALE: www.sicetelecom.it

airFiber 5
airFiber 5U

There are two airFiber models available for the 5 GHz spectrum. The mid-band model, AF-5, features the popular mid-band frequencies, which are freely used in many parts of the world.

The high-band (5.7 - 6.2 GHz) model, AF-5U, has robust filtering to enable co-location with devices operating in the lower 5 GHz bands while allowing operation at a higher output power in many areas of the world.

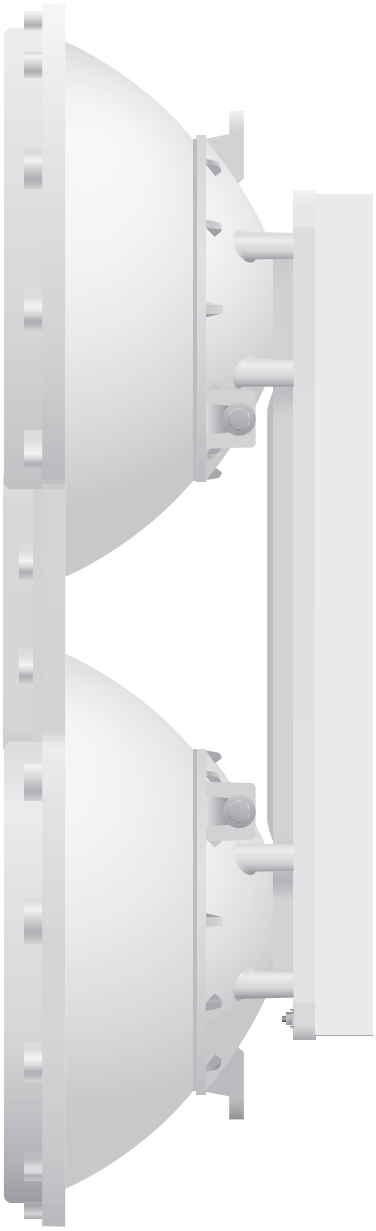

Side

Back

1.2+ Gbps
Real Data Throughput

5 GHz

100+ km
xRT
xtreme Range Technology

HDD
TDD FDD

SICE DISTRIBUTORE UFFICIALE: www.sicetelecom.it

Superior Processing

Ubiquiti Networks introduces our proprietary INVICTUS™ core communications processing engine. The speed, power, and efficiency of this integrated circuit enhances the performance of the airFiber AF-5/AF-5U.

Efficient Use of 5 GHz Band

airFiber AF-5/AF-5U features 1 MHz center channel resolution with market-leading Power Envelope Tracking technology. The airFiber AF-5/AF-5U accurately and continuously controls transmit power relative to the band edge. The power level automatically tracks to optimize performance near band edges, allowing you to choose the part of the band with the least interference.

Long-Range Links

Newly developed for the airFiber AF-5/AF-5U, the patent-pending xRT feature uses an innovative, adaptive multi-channel coding scheme to enhance radio transceiver performance, thereby maximizing your link budget and spectrum utilization – while still maintaining regulatory compliance. This results in links that can span distances from 10 m up to 100+ km.

Quick and Easy Installation

The unique sliding-clamp design of the airFiber AF-5/AF-5U allows mounting hardware to be pre-assembled prior to installation – no more dropped screws at the top of the tower. As an added convenience, the drop-in cradle mount design allows the installer to attach mounting hardware to the pole without having to support the weight of the airFiber radio during installation.

Radio Alignment Display

Newly designed for the airFiber AF-5/AF-5U, the Radio Alignment Display (RAD) makes aiming quicker and easier. The dual, calibrated signal strength indicators display the actual signal strength on the local and remote airFiber radios in real time. The comprehensive array of radio status indicators display the following:

- GPS synchronization status
- Master/slave mode
- RF link status
- RF overload warning
- Current modulation mode
- Link activity and speed for wired management and data ports

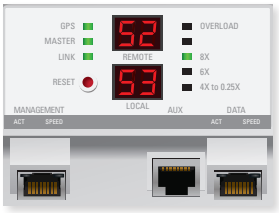

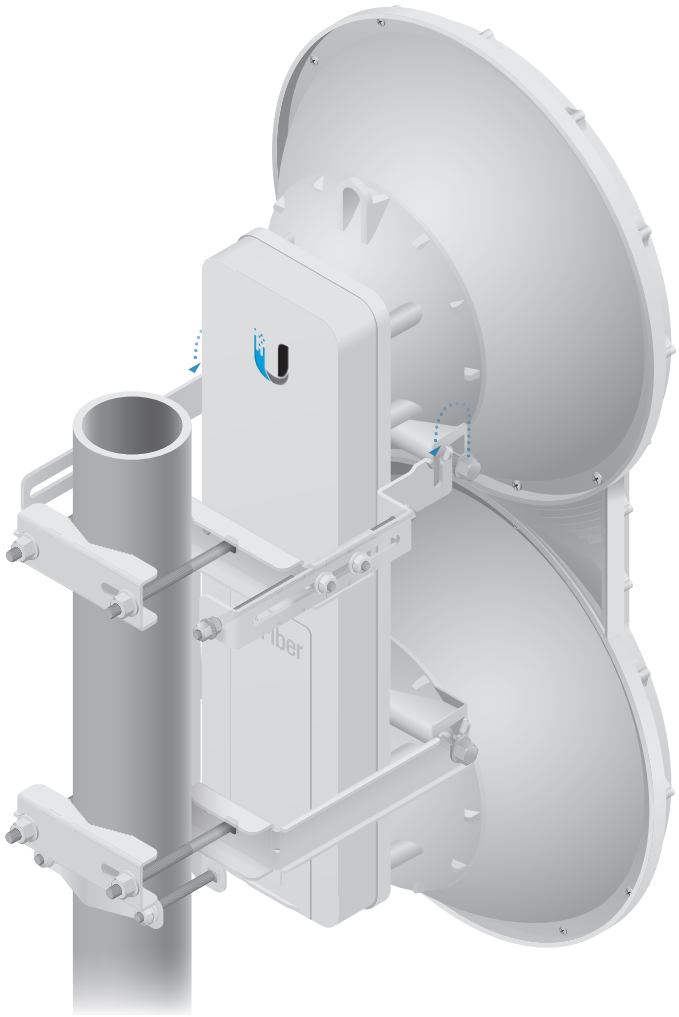

SICE DISTRIBUTORE UFFICIALE: www.sicetelecom.it

Specifications

airFiber AF-5/AF-5U	
Dimensions Radio Box	 938.4 x 468.4 x 281.4 mm (36.94 x 18.44 x 11.08") 1042 x 573 x 502 mm (41.02 x 22.56 x 19.76")
Weight Radio (Mount Included) Box	 16 kg (35.27 lb) 26.5 kg (58.42 lb)
Max. Power Consumption	40W
Power Supply	50V, 1.2A PoE GigE Adapter (Included)
Power Method	Passive Power over Ethernet
Supported Voltage Range	+42 to +58VDC, -48VDC
Automatic Transmit Power Control (ATPC)	Yes
Certifications	CE, FCC, IC
Mounting	Pole Mount Kit (Included)
Wind Loading	863 N @ 200 km/hr (194 lbf @ 125 mph)
Wind Survivability	200 km/hr (125 mph)
Operating Temperature	-40 to 55° C (-40 to 131°F)
LEDs	(12) Status LEDs: Data Port Link/Activity Data Port Speed Management Port Link/Activity Management Port Speed GPS Synchronization Master/Slave Link Status Modulation Mode 0.25x to 4x, 6x, 8x, 10x (Unlabeled), Overload Remote and Local Displays (Calibrated Signal Strength)
Operating Frequency	
AF-5 FCC 15.247, 15.407, IC RSS-210 ETSI EN 301 893, EN 302 502 Other Regions	 5470 - 5600 MHz, 5650 - 5850 MHz 5470 - 5875 MHz 5470 - 5950 MHz
AF-5U FCC 15.247, IC RSS-210 ETSI EN 302 502 Other Regions	 5725 - 5850 MHz 5725 - 5875 MHz 5725 - 6200 MHz
Interface	
Data Port	(1) 10/100/1000 Ethernet Port
Management Port	(1) 10/100 Ethernet Port
Auxiliary Port	(1) RJ-12, Alignment Tone Port
System	
Maximum Throughput	1.2+ Gbps
Maximum Range	100+ km (Dependent on Regulatory Region)
Packets per Second	1+ Million
Encryption	128-Bit AES
Uplink/Downlink Ratio	50% Fixed
Latency Full Duplex Mode Half Duplex Mode	 < 200 µs at Full Throughput < 2 ms at Full Throughput
Radio Frame Synchronization	GPS
Dynamic Frequency Selection AF-5 AF-5U	 CE, FCC/IC CE (FCC/IC Not Applicable)
MTU (Maximum Transmission Unit)	Up to 9600

SICE DISTRIBUTORE UFFICIALE: www.sicetelecom.it

airFiber AF-5/AF-5U Suggested Max. TX Power	
10x	39 dBm
8x	43 dBm
6x	45 dBm
4x and below	47 dBm

airFiber AF-5/AF-5U Receive Sensitivity								
Rate	Modulation	Sensitivity (10 MHz)	Sensitivity (20 MHz)	Sensitivity (30 MHz)	Sensitivity (40 MHz)	Sensitivity (50 MHz)	FDD Capacity*	TDD Capacity*
10x	1024QAM	-63 dBm	-60 dBm	-59 dBm	-58 dBm	-57 dBm	1280 Mbps	640 Mbps
8x	256QAM	-70 dBm	-67 dBm	-66 dBm	-65 dBm	-64 dBm	1024 Mbps	512 Mbps
6x	64QAM	-77 dBm	-74 dBm	-73 dBm	-72 dBm	-71 dBm	768 Mbps	384 Mbps
4x	16QAM MIMO	-84 dBm	-81 dBm	-80 dBm	-79 dBm	-78 dBm	512 Mbps	256 Mbps
2x	QPSK MIMO	-90 dBm	-87 dBm	-86 dBm	-85 dBm	-84 dBm	256 Mbps	128 Mbps
1x	½ Rate QPSK xRT	-93 dBm	-90 dBm	-89 dBm	-88 dBm	-87 dBm	128 Mbps	64 Mbps
¼x	¼x QPSK xRT	-95 dBm	-93 dBm	-93 dBm	-92 dBm	-91 dBm	32 Mbps	16 Mbps

* FDD = (2) 50 MHz channels and TDD = (1) 50 MHz channel

airFiber AF-5/AF-5U Radio Frequency	
GPS	GPS Clock Synchronization
Transceiver	
EIRP	~50 dBm (Dependent on Regulatory Region and Frequency Band)
Frequency Accuracy	±2.5 ppm without GPS Synchronization ±0.2 ppm with GPS Synchronization
Channel Bandwidth	10/20/30/40/50 MHz
Modulation	1024QAM MIMO 256QAM MIMO 64QAM MIMO 16QAM MIMO QPSK MIMO ½ Rate QPSK xRT ¼ Rate QPSK xRT
Integrated Split Antenna	
TX Gain	23 dBi
RX Gain	23 dBi
Beamwidth	6°
Front-to-Back Ratio	70 dB
Polarity	Dual-Slant Polarization
Cross-Polarity Isolation	> 28 dB

SICE DISTRIBUTORE UFFICIALE: www.sicetelecom.it

airFiber AF-5/AF-5U Capacity (Mbps)						
		Channel Width (MHz)				
Rate	Modulation	10	20	30	40	50
10x	1024 QAM MIMO	256.0	512.0	768.0	1024.0	1280.0
8x	256 QAM MIMO	204.8	409.6	614.4	819.2	1024.0
6x	64 QAM MIMO	153.6	307.2	460.8	614.4	768.0
4x	16 QAM MIMO	102.4	204.8	307.2	409.6	512.0
2x	QPSK MIMO	51.2	102.4	153.6	204.8	256.0
1x	½ Rate QPSK xRT	25.6	51.2	76.8	102.4	128.0
¼ x	¼ Rate QPSK xRT	6.4	12.8	19.2	25.6	32.0

SICE DISTRIBUTORE UFFICIALE: www.sicetelecom.it

airFiber® 24

Superior 24 GHz Performance

airFiber AF-24/AF-24HD provides a breakthrough in 24 GHz backhaul performance.

Systems for millimeter-wave frequencies typically experience RF losses when part of the RF is lost in the switches and filters.

The Ubiquiti R&D team eliminated such RF losses with separate yet integrated TX and RX antennas, so the link budget is robust and the airFiber AF-24/AF-24HD has better noise figure and higher transmit power efficiency.

Two airFiber 24 GHz Models

Two models deliver superior speed with spectral efficiency in the worldwide, license-free, 24 GHz radio band.

The standard model, AF-24, delivers up to 1.5+ Gbps throughput at a range of up to 13+ km.

The heavy-duty model, AF-24HD, provides more throughput at up to 2 Gbps and increased range of up to 20+ km. It also includes a more rugged exterior with a metal reflector, to protect against nature's harshest elements.

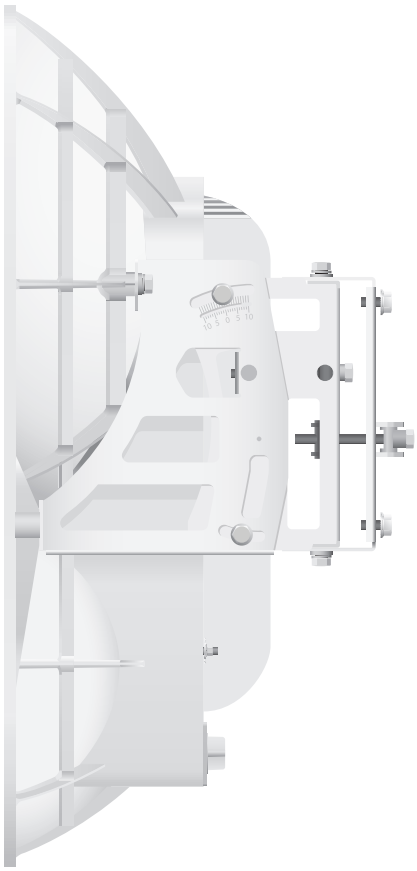

Side

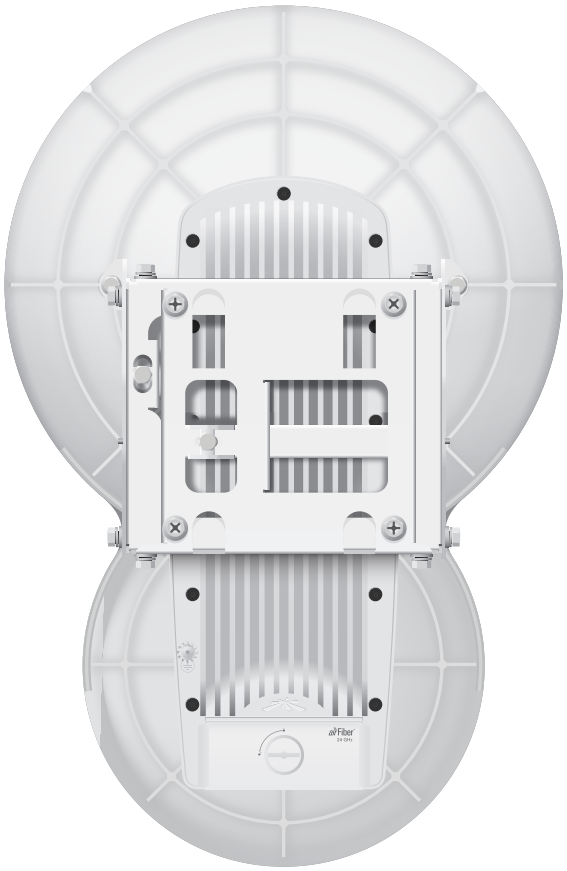

Back

1.5+ Gbps
Real Data Throughput

24 GHz
License-Free

13+ km
Extreme Range

HDD
TDD FDD

SICE DISTRIBUTORE UFFICIALE: www.sicetelecom.it

Specifications

airFiber AF-24	
Operating Frequency	24.05 – 24.25 GHz*
Dimensions Radio Box	 649 x 426 x 303 mm (25.55 x 16.77 x 11.93") 725 x 520 x 410 mm (28.54 x 20.47 x 16.14")
Weight Radio (Mount Included) Box	 10.5 kg (23.15 lb) 17 kg (37.48 lb)
Max. Power Consumption	50W
Power Supply	50V, 1.2A PoE GigE Adapter (Included)
Power Method	Passive Power over Ethernet
Supported Voltage Range	+42 to +58VDC, -48VDC
Certifications	CE, FCC, IC
Wind Loading	480 N @ 200 km/hr (108 lbf @ 125 mph)
Wind Survivability	200 km/hr (125 mph)
Mounting	Pole Mount Kit (Included)
Operating Temperature	-40 to 55° C (-40 to 131° F)
LEDs	(8) Status LEDs: Data Port Speed Data Port Link/Activity Configuration Port Speed Configuration Port Link/Activity GPS Synchronization Modulation Mode Master/Slave RF Status (1) Two-Digit LED Display Calibrated in dBm
Interface	
Data Port	(1) 10/100/1000 Ethernet Port
Configuration Port	(1) 10/100 Ethernet Port
Auxiliary Port	(1) RJ-12, Alignment Tone Port
System	
Maximum Throughput	1.5+ Gbps
Maximum Range	13+ km
Packets per Second	> 1 Million
Encryption	128-Bit AES
Uplink/Downlink Ratio	50% Fixed
Latency Full Duplex Mode Half Duplex Mode	 < 200 µs at Full Throughput < 2 ms at Full Throughput
MTU (Maximum Transmission Unit)	Up to 9600

* Two 100 MHz channels are available:: 24.1 GHz (24.05-24.15 GHz) and 24.2 GHz (24.15-24.25 GHz)

airFiber AF-24 Receive Sensitivity			
Modulation	Sensitivity	FDD Capacity*	TDD Capacity*
64QAM	-66 dBm	1500 Mbps	760 Mbps
16QAM	-72 dBm	1000 Mbps	507 Mbps
QPSK MIMO	-78 dBm	500 Mbps	253 Mbps
QPSK SISO	-80 dBm	250 Mbps	127 Mbps
¼x QPSK SISO	-87 dBm	62.5 Mbps	31.7 Mbps

* FDD = (2) 100 MHz channels and TDD = (1) 100 MHz channel

SICE DISTRIBUTORE UFFICIALE: www.sicetelecom.it

airFiber AF-24 Radio Frequency	
GPS	GPS Clock Synchronization
Transceiver	
EIRP	~33 dBm (FCC/IC), ~20 dBm (CE), ~40 dBm (Other Regions)
Frequency Accuracy	±2.5 ppm without GPS Synchronization ±0.2 ppm with GPS Synchronization
Channel Bandwidth	100 MHz
Operating Channels	24.1 GHz, 24.2 GHz
Modulation	64QAM MIMO 16QAM MIMO QPSK MIMO QPSK SISO ¼x QPSK SISO
Integrated Split Antenna	
TX Gain	33 dBi
RX Gain	38 dBi
Beamwidth	< 3.5°
Front-to-Back Ratio	70 dB
Polarity	Dual-Slant Polarization
Cross-Polarity Isolation	> 28 dB

airFiber AF-24 Capacity (Mbps)		
Rate	Modulation	100 MHz Channel Width*
6x	64 QAM MIMO	1500.0
4x	16 QAM MIMO	1000.0
2x	QPSK MIMO	500.0
1x	QPSK SISO	250.0
¼ x	¼ QPSK SISO	62.5

* Aggregated capacity in Full-Duplex mode

SICE DISTRIBUTORE UFFICIALE: www.sicetelecom.it

airFiber® 24 HD

Best-in-Class Performance and Range

Our INVICTUS custom silicon dramatically improves wireless performance. The AF-24HD model supports the dense modulation rates, up to 256QAM, that are required for high data rates, up to 2 Gbps.

The airFiber AF-24/AF-24HD features the most powerful automatic compensation for path loss degradation due to rain fade, so it provides the best range among 24 GHz products and allows for constellation threshold extension.

Robust Mechanical Assembly

An independent lab has tested the airFiber mechanical assembly to meet MIL-STD-810G, a rigorous United States MIL-STD (Military Standard) that defines a variety of challenging environmental conditions.

The mechanical assembly has also undergone vibration testing using an extended version of IEC 60068-2-6, an environmental standard of the IEC (International Electrotechnical Commission).

Side

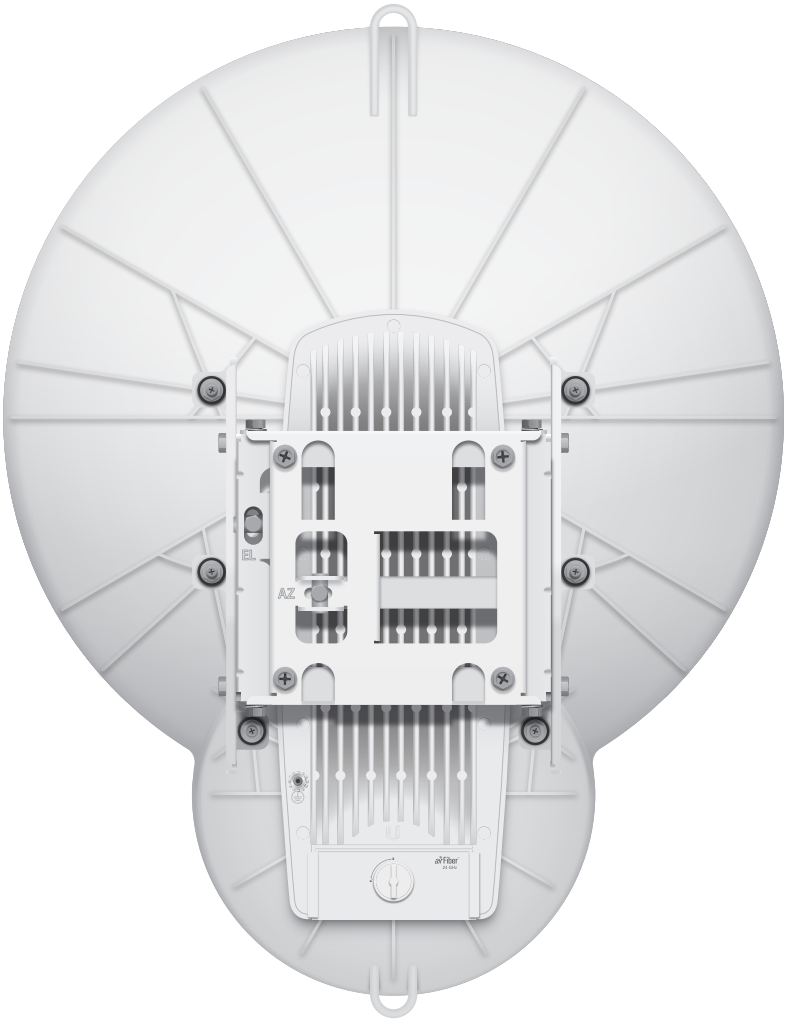

Back

2 Gbps
Real Data Throughput

24 GHz
License-Free

20+ km
Extreme Range

HDD
TDD FDD

SICE DISTRIBUTORE UFFICIALE: www.sicetelecom.it

Specifications

airFiber AF-24HD	
Operating Frequency	24.05 – 24.25 GHz
Dimensions Radio Box	 593 x 768 x 370 mm (23.35 x 30.24 x 14.57") 796 x 696 x 49.5 mm (31.34 x 27.40 x 1.95")
Weight Radio (Mount Included) Box	 17.3 kg (38.14 lb) 25.5 kg (56.22 lb)
Max. Power Consumption	50W
Power Supply	50V, 1.2A PoE GigE Adapter (Included)
Power Method	Passive Power over Ethernet
Supported Voltage Range	+42 to +58VDC, -48VDC
Certifications	CE, FCC, IC
Wind Loading	770 N @ 200 km/hr (170 lbf @ 125 mph)
Wind Survivability	200 km/hr (125 mph)
Mounting	Pole Mount Kit (Included)
Operating Temperature	-40 to 55° C (-40 to 131° F)
LEDs	(8) Status LEDs: Data Port Speed Data Port Link/Activity Configuration Port Speed Configuration Port Link/Activity GPS Synchronization Modulation Mode Master/Slave RF Status (1) Two-Digit LED Display Calibrated in dBm
Interface	
Data Port	(1) 10/100/1000 Ethernet Port
Configuration Port	(1) 10/100 Ethernet Port
Auxiliary Port	(1) RJ-12, Alignment Tone Port
System	
Maximum Throughput	2 Gbps
Maximum Range	20+ km
Packets per Second	1+ Million
Packets per Second	> 1 Million
Encryption	128-Bit AES
Uplink/Downlink Ratio	50% Fixed
Latency Full Duplex Mode Half Duplex Mode	 < 200 µs at Full Throughput < 2 ms at Full Throughput
MTU (Maximum Transmission Unit)	Up to 9600

airFiber AF-24HD Receive Sensitivity			
Modulation	Sensitivity	FDD Capacity*	TDD Capacity*
256QAM	-60 dBm	2000 Mbps	1024 Mbps
64QAM	-66 dBm	1500 Mbps	760 Mbps
16QAM	-72 dBm	1000 Mbps	507 Mbps
QPSK MIMO	-78 dBm	500 Mbps	253 Mbps
QPSK SISO	-80 dBm	250 Mbps	127 Mbps
¼x QPSK SISO	-87 dBm	62.5 Mbps	31.7 Mbps

* FDD = (2) 100 MHz channels and TDD = (1) 100 MHz channel

SICE DISTRIBUTORE UFFICIALE: www.sicetelecom.it

airFiber AF-24HD Radio Frequency	
GPS	GPS Clock Synchronization
Transceiver	
EIRP	~33 dBm (FCC/IC), ~20 dBm (CE), ~40 dBm (Other Regions)
Frequency Accuracy	±2.5 ppm without GPS Synchronization ±0.2 ppm with GPS Synchronization
Channel Bandwidth	100 MHz
Operating Channels	24.1 GHz, 24.2 GHz
Modulation	256QAM MIMO 64QAM MIMO 16QAM MIMO QPSK MIMO QPSK SISO ¼x QPSK SISO
Integrated Split Antenna	
TX Gain	33 dBi
RX Gain	40 dBi
Beamwidth	< 3.5°
Front-to-Back Ratio	70 dB
Polarity	Dual-Slant Polarization
Cross-Polarity Isolation	> 28 dB

airFiber AF-24HD Capacity (Mbps)		
Rate	Modulation	100 MHz Channel Width*
8x	256 QAM MIMO	2000.0
6x	64 QAM MIMO	1500.0
4x	16 QAM MIMO	1000.0
2x	QPSK MIMO	500.0
1x	QPSK SISO	250.0
¼ x	¼ QPSK SISO	62.5

* Aggregated capacity in Full-Duplex mode

Specifications are subject to change. Ubiquiti products are sold with a limited warranty described at: www.ubnt.com/support/warranty
©2012-2017 Ubiquiti Networks, Inc. All rights reserved. Ubiquiti, Ubiquiti Networks, the Ubiquiti U logo, the Ubiquiti beam logo, airFiber, airOS, INVICTUS, and xRT are trademarks or registered trademarks of Ubiquiti Networks, Inc. in the United States and in other countries. All other trademarks are the property of their respective owners..

www.ubnt.com

SICE DISTRIBUTORE UFFICIALE: www.sicetelecom.it